17.5-18.5 GHz Band Pass Filter BPF-18000MS1

RVA 1

Specifications

1	Center Frequency (F0)	18GHz
2	Pass Band Frequency	17.5 ~ 18.5 GHz
3	Pass Band Insertion Loss	≤0.7dB
4	Pass Band Ripple	≤0.2dB
5	Pass Band VSWR	≤1.22
6	Stop Band Rejection	≥60dB @ DC ~ 16GHz ≥60dB @ 20 ~ 35GHz
7	Impedance	50 Ohms
8	Power Handling	5W max
9	Connectors	SMA-Female
10	Surface Finish	Black Painted
11	Temperature Range	-30℃ ~ +70℃
12	Net Weight	45g

Dimensions(mm)

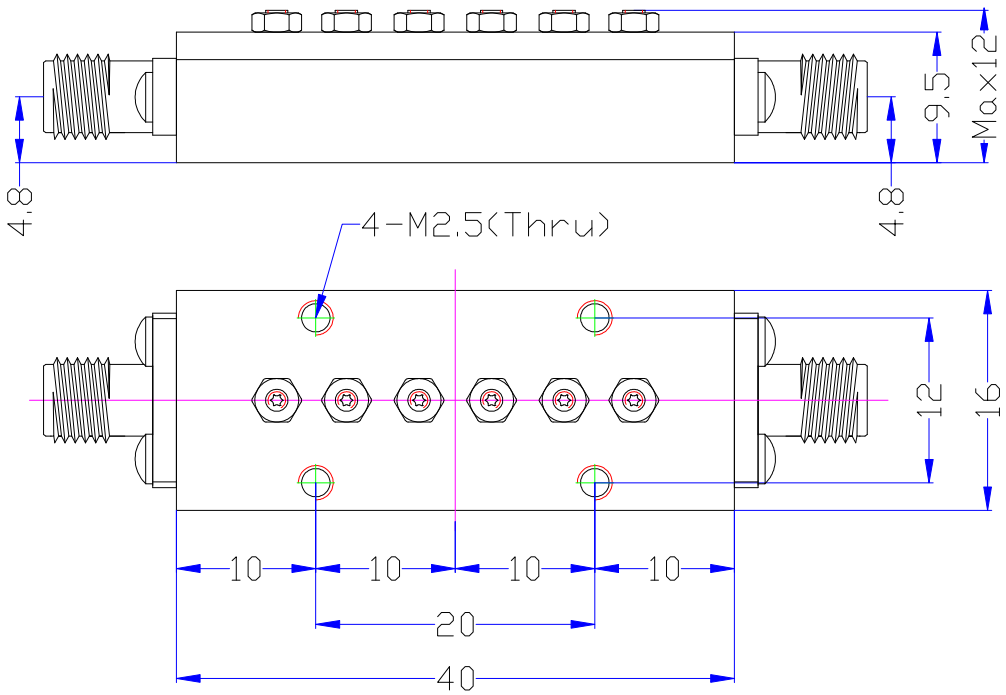

17.5-18.5 GHz Band Pass Filter BPF-18000MS1

RVA 1
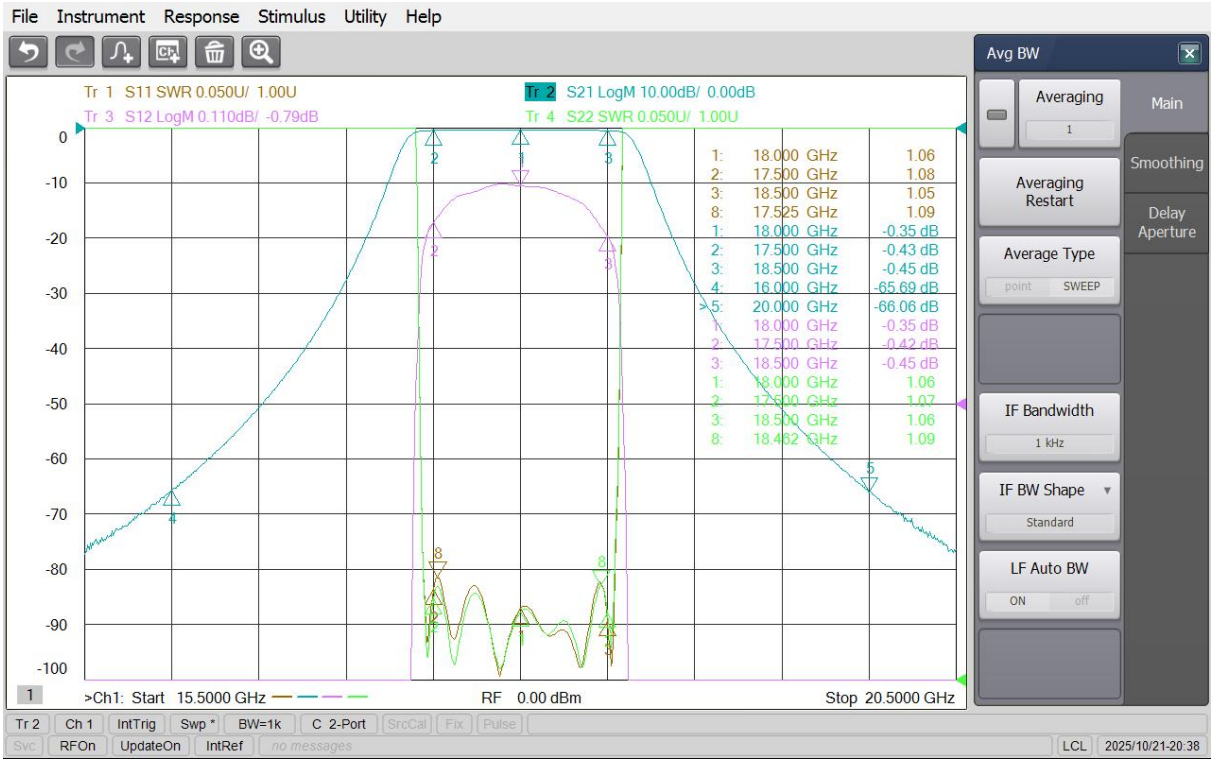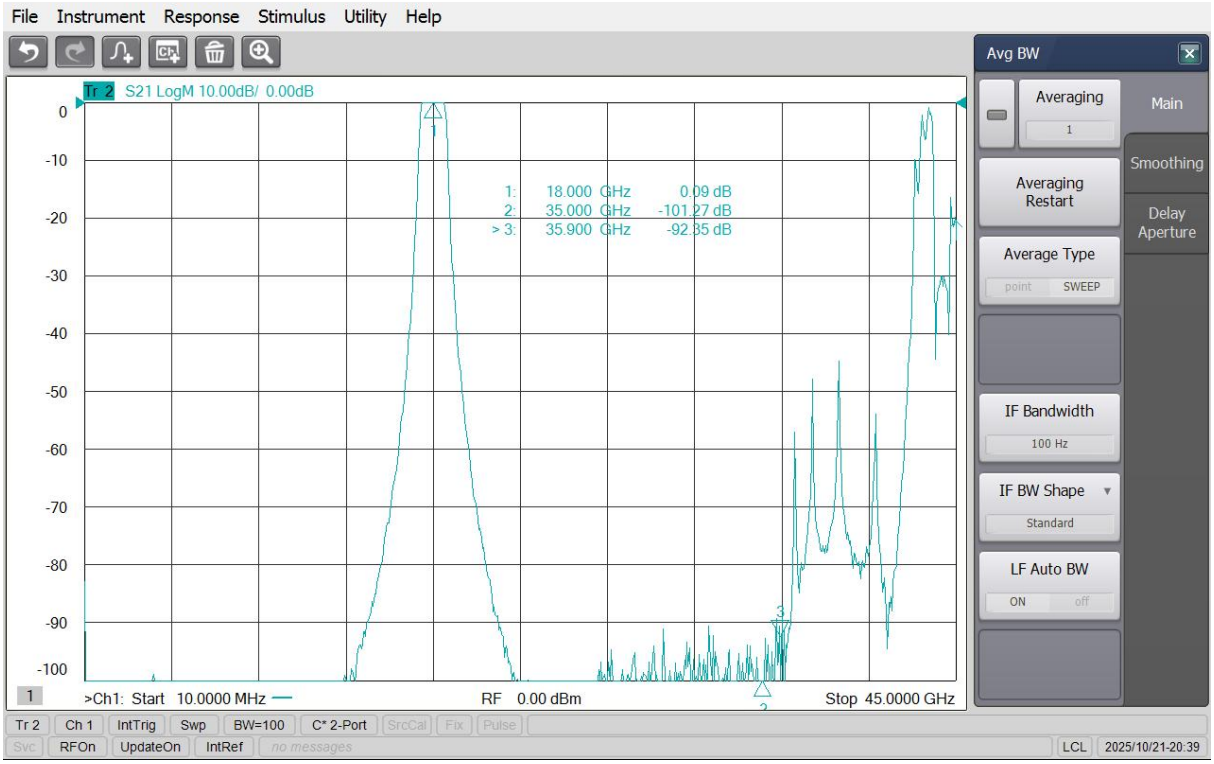
Typical Test Data